Heavy Duty
Ball Pin Lock-Adjustable Latch

Model No	PAH-61-200-BATRIG
Weight	0.150 Kgs
Holding Capacity	X - 7.40 kN
Material	Steel
Finish	Zinc Plated
Supplied with Hook	FH-60-2600
Model No	PAH-61-200-BATRIG-SS
Material	Stainless Steel-304
Supplied with Hook	FH-60-2600-SS

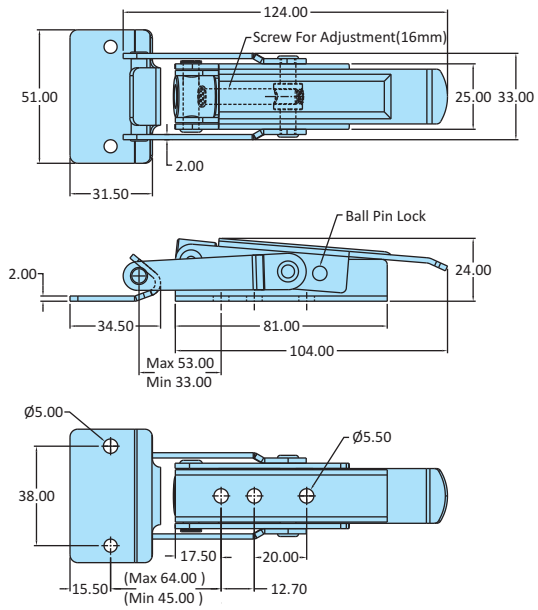

Heavy Duty
Adjustable Latch

Model No	PAH-43-4000
Weight	0.540 Kgs
Holding Capacity	X - 19.60 kN
Material	Steel
Finish	Zinc Plated
Supplied with Hook	FH-43-4000
Model No	PAH-43-4000-SS
Material	Stainless Steel-304
Supplied with Hook	FH-43-4000-SS

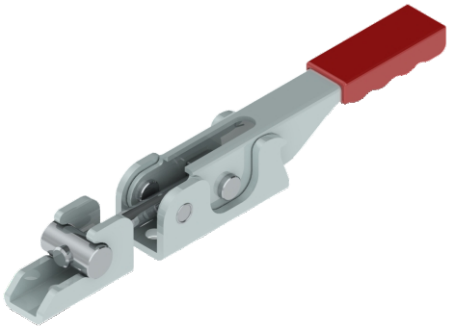

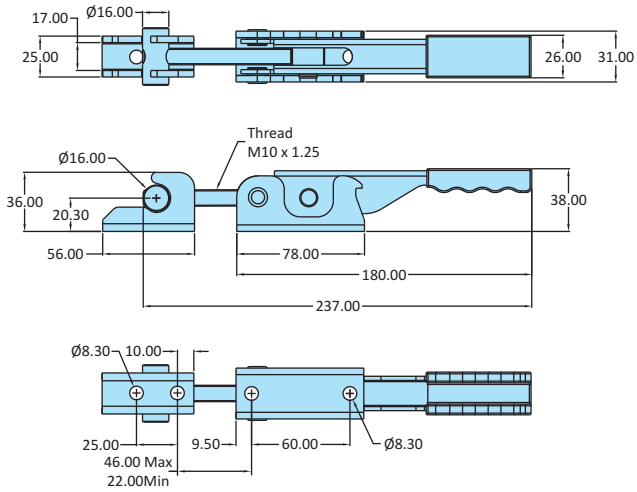

Heavy Duty
Adjustable Latch with Additional Locking Mechanism
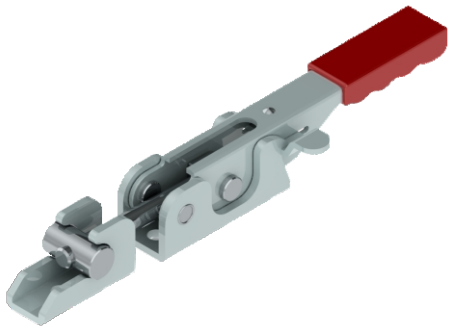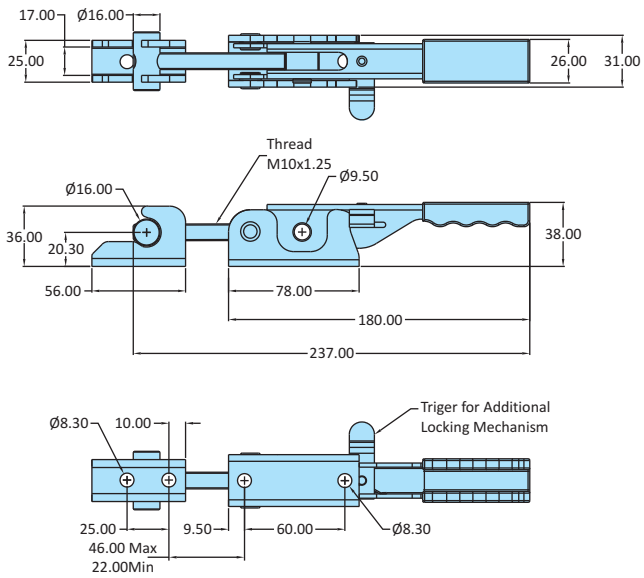
Model No	PAH-44-4000-TRIG
Weight	0.490 Kgs
Holding Capacity	X - 19.60 kN
Material	Steel
Finish	Zinc Plated
Supplied with Hook	FH-43-4000
Model No	PAH-44-4000-TRIG-SS
Material	Stainless Steel-304
Supplied with Hook	FH-43-4000-SS